Brückewell

New Product Seminar-2025

www.bruckewell-semi.com

INELTEK
Design-In Expertise & Service

CONTACT US FOR MORE INFORMATION
Germany • Austria • United Kingdom • Italy • USA • China (HK & SZ)

PHONE+49 7321/9385-0
EMAIL - info@ineltek.com
WEB - www.ineltek.com

LOGO Significance

Brückewell

Bruckewell comes from the German "Brücke" , meaning "bridge" and English "well"

To become synonymous with technical innovation and timely marketing partner

The green leaf symbol reflects taking an active part in health & safety and protecting the environment as our responsibility

Our Products

01

Diode
Silicon Diodes

Description:

Standard/ Fast/ Schottky
TVS/ Zener/ ESD Protector

02

Transistor
Silicon MOSFET/IGBT

Description:

Unipolar
20~300V N/P MOSFET
600V up HV MOSFET
Small Signal MOSFET
Bipolar
Low Losses, 650-1200V IGBT
Automotive Grade IGBT

03

Wide Band Gap
Silicon Carbide Gallium Nitride

Description:

SiC-SiC, GaN-Si, GaN-Sapphire
SiC Schottky Diode
SiC MOSFET
SiC series Module
650V GaN-S HEMT
650V GaN-S **IC**

Supplier Chain Control

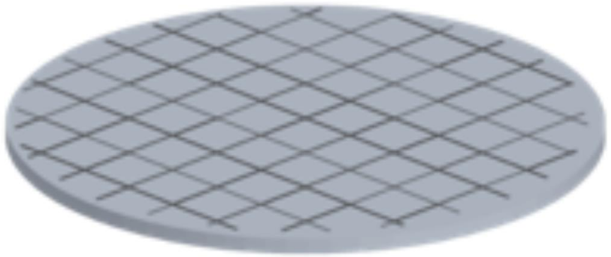

Semiconductor Wafer Process

Taiwan/ China

POWERCHIP (Taiwan)

MOSEL / EPISIL(Taiwan)

Vanguard Semi (Taiwan)

GTA (China)

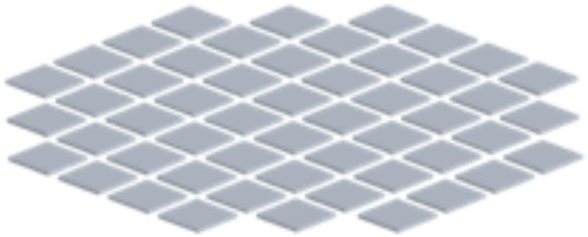

Wafer Testing and dicing

Taiwan/ China

Bruckewell (Taiwan)

Micro Silicon (MSEC) (Taiwan)

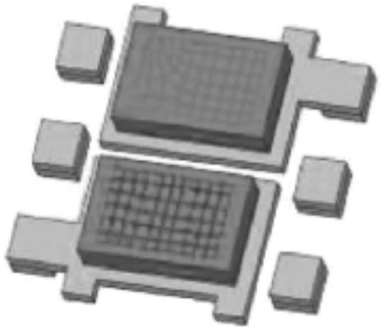

Assembly & Package

Taiwan, China/ ASEAM

gEM (China)

HUATIAN (China)

FENGHUA (China)

Cirtek (Philippines)

AIC (Malaysia)

Quality Compliance

RoHS Compliant

Halogen Free

IMDS for Automotive

AEC-Q101 Qualified Available

Market Analysis

Global Market Scale by Technology

WBG share is small but increasing.
WBG PE is a small segment of PE, PE is a very small share of total semiconductors.
Growth of WBG devices is driven by smaller packaging, high power density and higher efficiency in Auto and industrial.

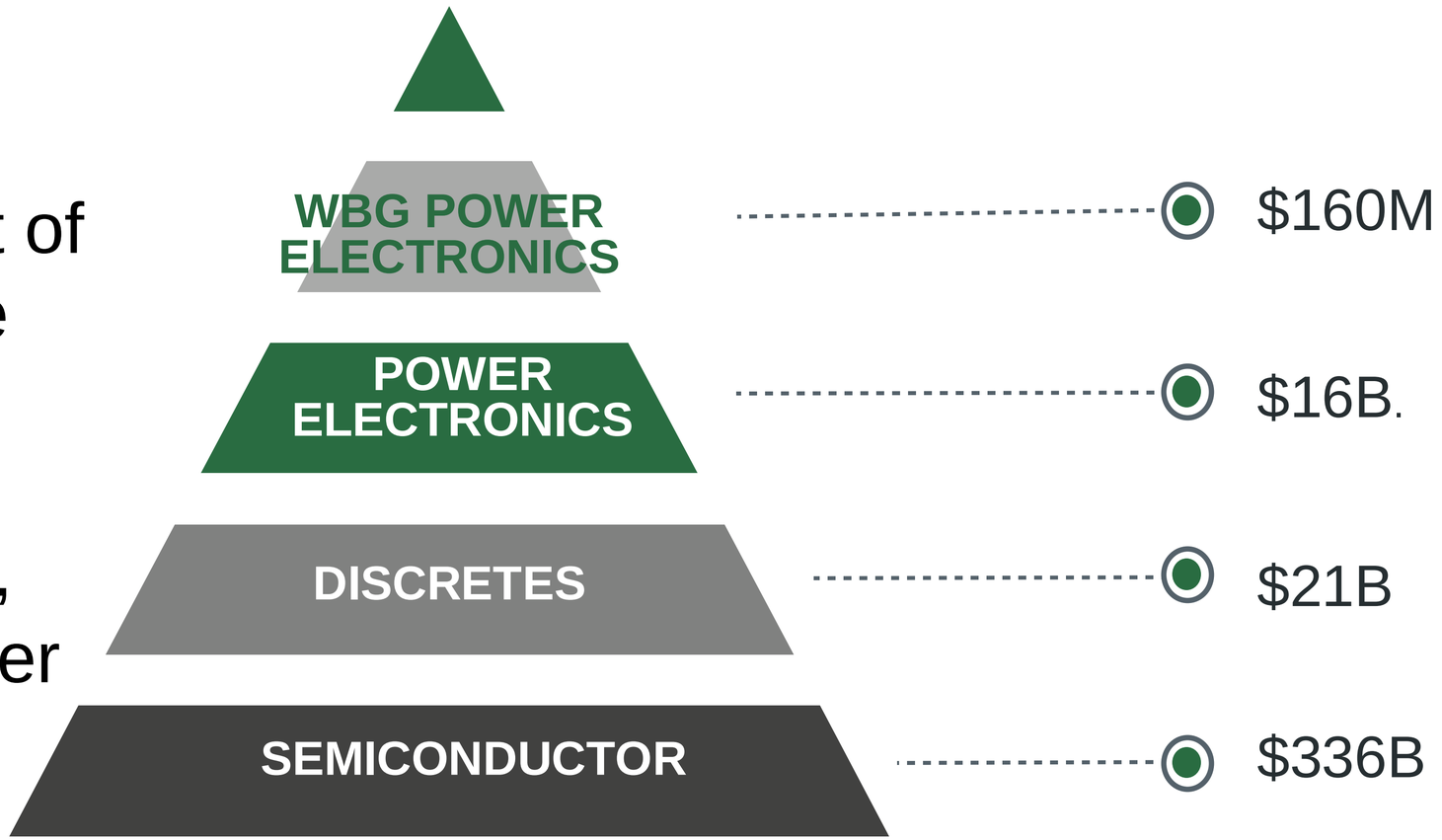

What we offer for different Freq. marketing

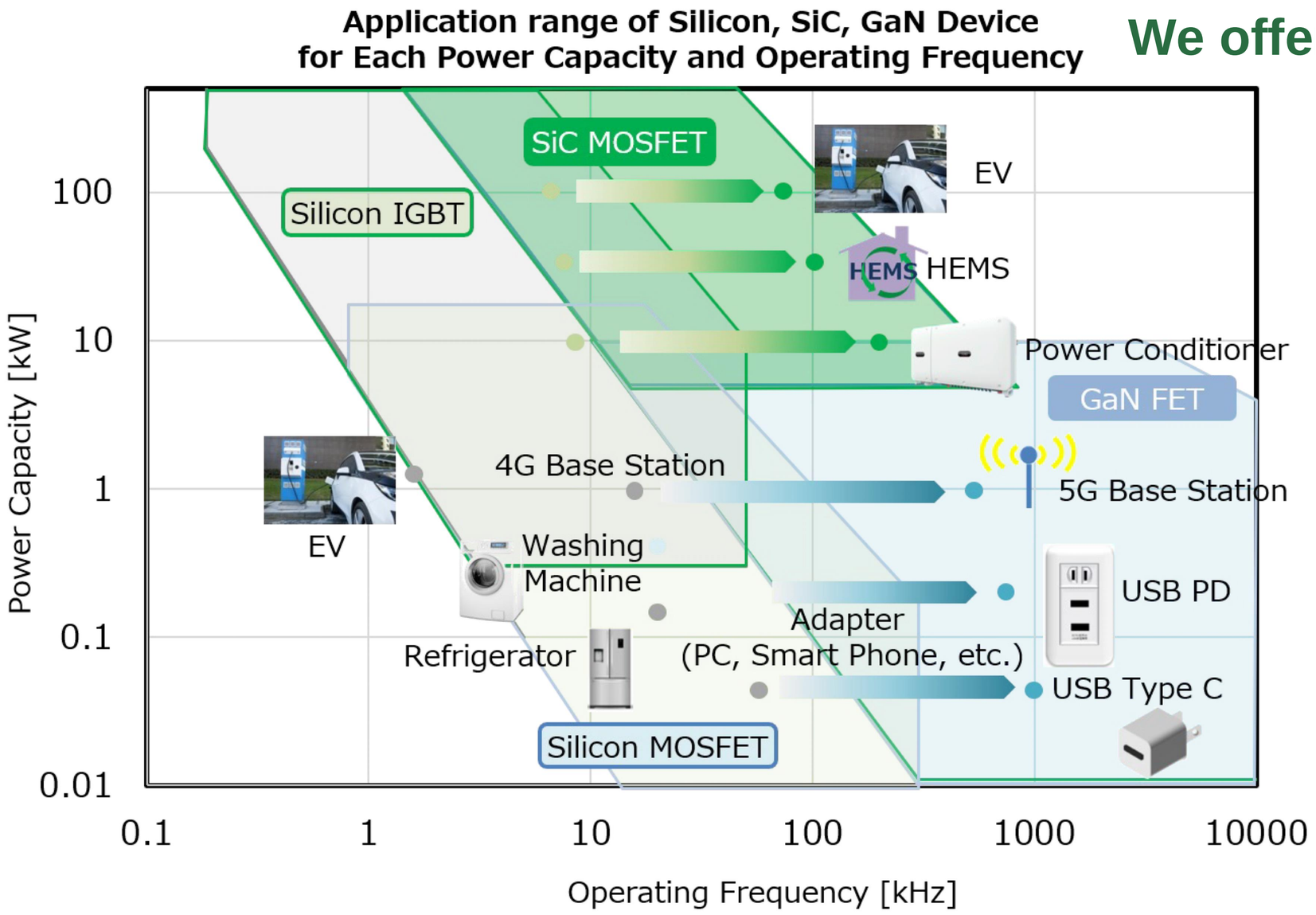

We offer Si/ SiC/ GaN MOSFETs

SiC Device Has Advantages in Motor Drives and Other High-Voltage / High-Current Applications
As power generation systems, HEMS for electric homes, and electric vehicles (EV).

GaN Device Has Advantages in Switching Power Supplies and Other Compact / High-Frequency Applications
As 5G, USB C,
USB Power Delivery (USB-PD)

Revenue by key application -2024 ($USD)

Electronics

20%

AC-DC/ DC-DC power supply

Battery power supply

Switched-mode power supply

Home appliance/ multimedia

LED Lighting

Communication

14%

PLC, Power Line

Communication

ProE, Power over Ethernet

IP Cam, Internet protocol

Telecommunication

Automotive

51%

Automotive/ EV

Infotainment system

Car Headlight

Industrial

15%

Power Tool

Industrial server

Robot

Solar Application

New Product Roadmap

	2023	2024	2025	2026
Diode/ Rectifier	SiC SBD 4A-50A, 650V/ 1200V	50A 1700V ~2000V SiC Schottky 150A, 1200V SiC SBD for Module		3300V SiC SBD for power module SiC Half Bridge on one chip
MOSFET	Low/ Mid Trench MOS for high power GaN Cascode HEMT, 650V SiC MOSFET, 1200V 160~20mohm	Patent Si MOSFET Array Patent SiC MOS Array 650V, SiC MOSFET 40V~100V GaN E-Mode		Foip MOSFET for 400A up
IGBT	650~1200V FS IGBT (5A~80A) 650V, IGBT with Sic SBD			12” IGBT wafer 400V light IGBT
Power Module		IGBT+SiC SBD on SOT-227 IGBT+SiC MOSFET on SOT-227 1200V SiC MOSFET module		IGBT Module IGBT+ SiC SBD IPM SiC MOSFET Bridge Module

Production | Develop | Plan

MOSFET for the electric toothbrush

Smaller-DFN 3X3 Dual, Better-Rthjc low, RDS(on) low

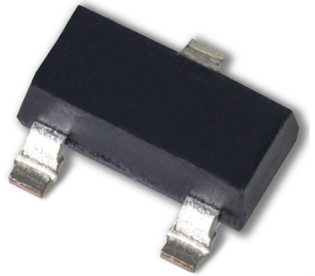

SOT-23 X 2 for N-Ch and P-Ch

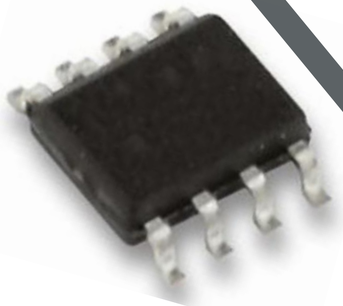

N-Ch + P-Ch in SO-8

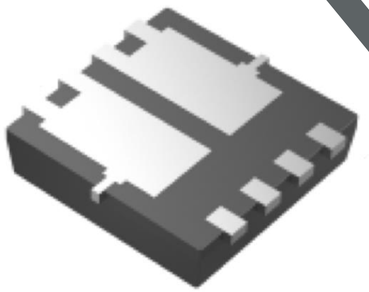

N-Ch + P-Ch in DFN 3X3

MSHM20C04D

60V Nch+P-Ch fan motors, AMI meters

The MSQ60C04D is a powerful dual Nch + Pch MOSFET designed to handle voltages up to 60V, making it suitable for 24V input systems such as factory automation equipment and base station motors. Also used in AMI smart meter applications

Its Nch MOSFET is 39mohm, Pch MOSFET is 72mohm,

Compared with conventional products, on-resistance is reduced by 50%.

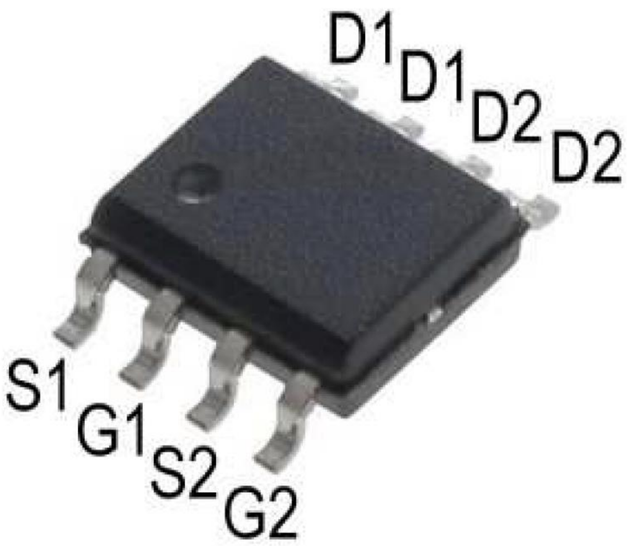

Small 350V MOSFET for SSR application （**Solid State Relay， SSR**）

350V, 15ohm N-Ch MOS SOT-23
Design in for the SSR

Brückewell

MS350N1500

N-Channel 350-V (D-S) MOSFET

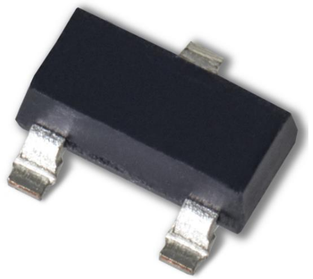

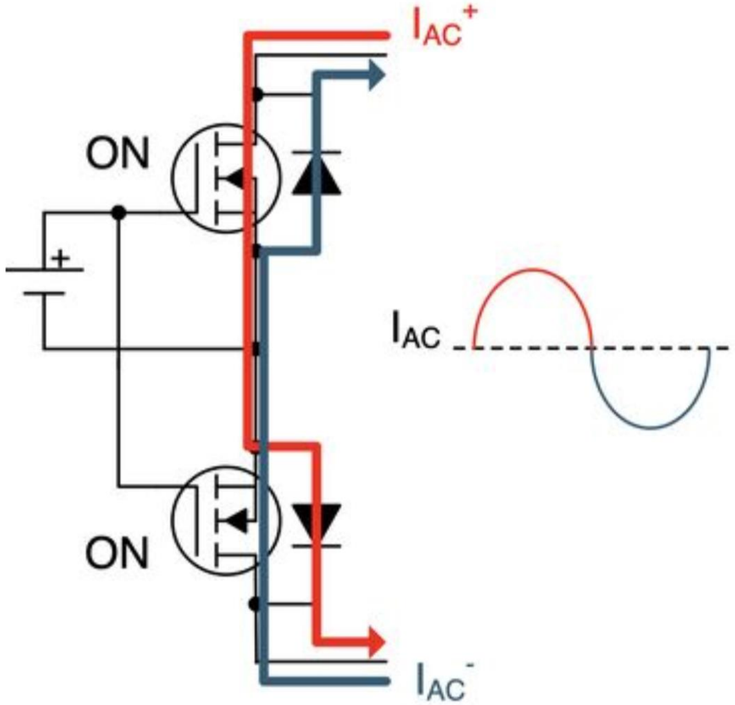

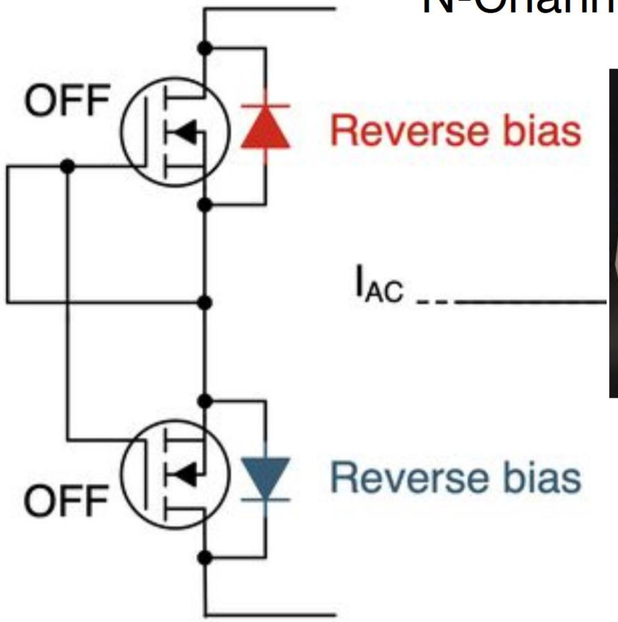

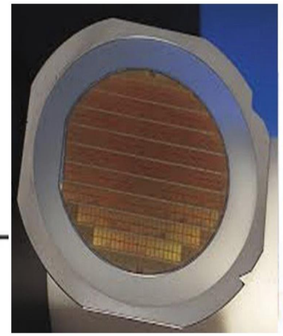

Offer
SOT-23 package
KGD by Tray, on Tape
Chip on Reel

Si-MOS, Transistor, SiC Diode/MOS For EV Charging Station

The 60V Dual N-Ch MOS with Low RDS(on) is for **the plug-in of electric cars**

The 650V/ 1200V SiC Diode/ MOSFET to support the **electric vehicle supply equipment**, **EVSE**

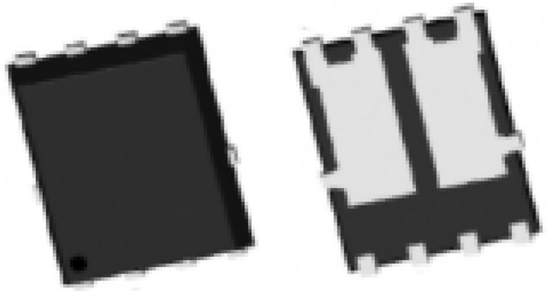

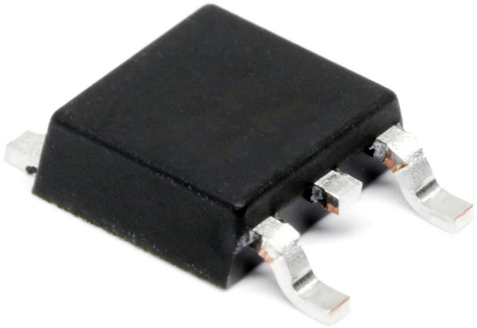

TOLL Package Features

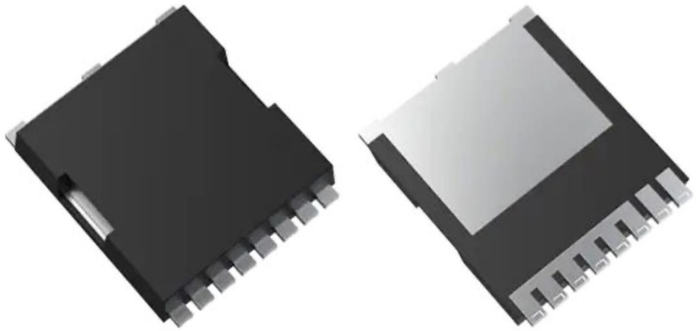

TOLL: Transistor Outline Leadless
Dimensions:10 x 11 x 2.3 mm
Thermal Resistance (RthJC):Max < 0.4 °C/W
Size Efficiency:
30% smaller footprint compared to traditional D2PAK products
Height: 2.3 mm, which is half the height of comparable designs
The TOLL package accommodates a range of devices, including MOSFETs, SiC MOSFETs, GaN HEMTs, and IGBTs, highlighting its versatility and readiness for mass production. Additionally, Kelvin source connections enhance the ability for reliable high-speed switching.

- **100V:** MSO100N019IN, 330A, RDS(on) 1.6 mΩ
- **150V:** MSO150N045IN, 188A, RDS(on) 3.7 mΩ
- **600V:** MSO600N480, 48A, RDS(on) 48 mΩ

If TOLL package, better, and same price with DFN 8X8, D2PAK...

High Power MOSFETs Application

Silicon high power density MOS-40V

BVDSS	RDSON	ID	Wire bonding Tech.
MSH40N065(AU)	5.6mohm	75A	Al Ribbon
MSH40N032(AU)	2.5mohm	90A	Al Ribbon
MSH40N020(AU)	1.5mohm	160A	Al Ribbon
MSH40N01(AU)	1.4mohm	180A	Cu Clip
MSH40N02(AU)	0.8mohm	250A	Cu Clip+Bump

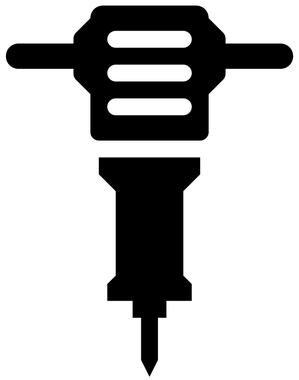
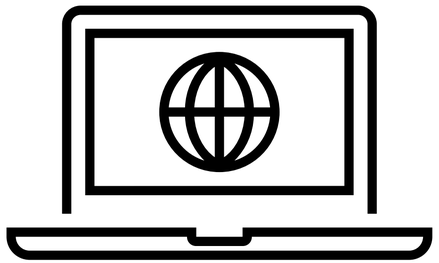
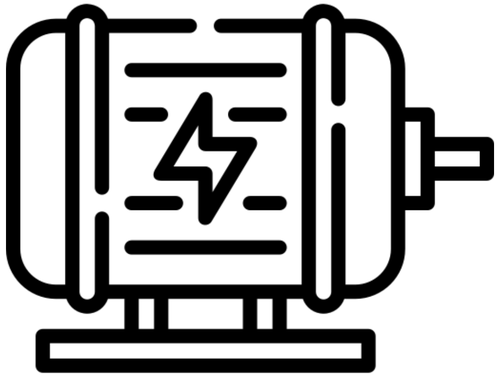
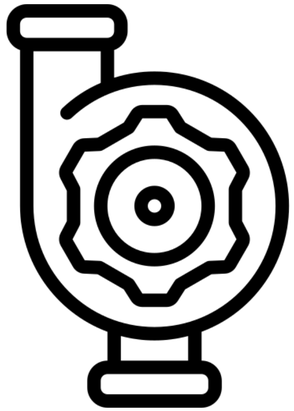

Silicon High current rated TOLL MOSFETs

Feature

In order to meet the strict CO2 emissions regulations **48V systems** are an increasing trend among Automotive OEMs**. Low voltage, high current MOSFETs are key components** in such applications.

With a solder contact area that is **50%** bigger than the TO263, the TOLL package enables a junction-case thermal impedance of **0.45°C/W**, allowing these MOSFETs to handle currents up to **330A**.

These MOSFETs are qualified to AEC-Q101, PPAP capable, and are manufactured in IATF 16949 certified facilities.

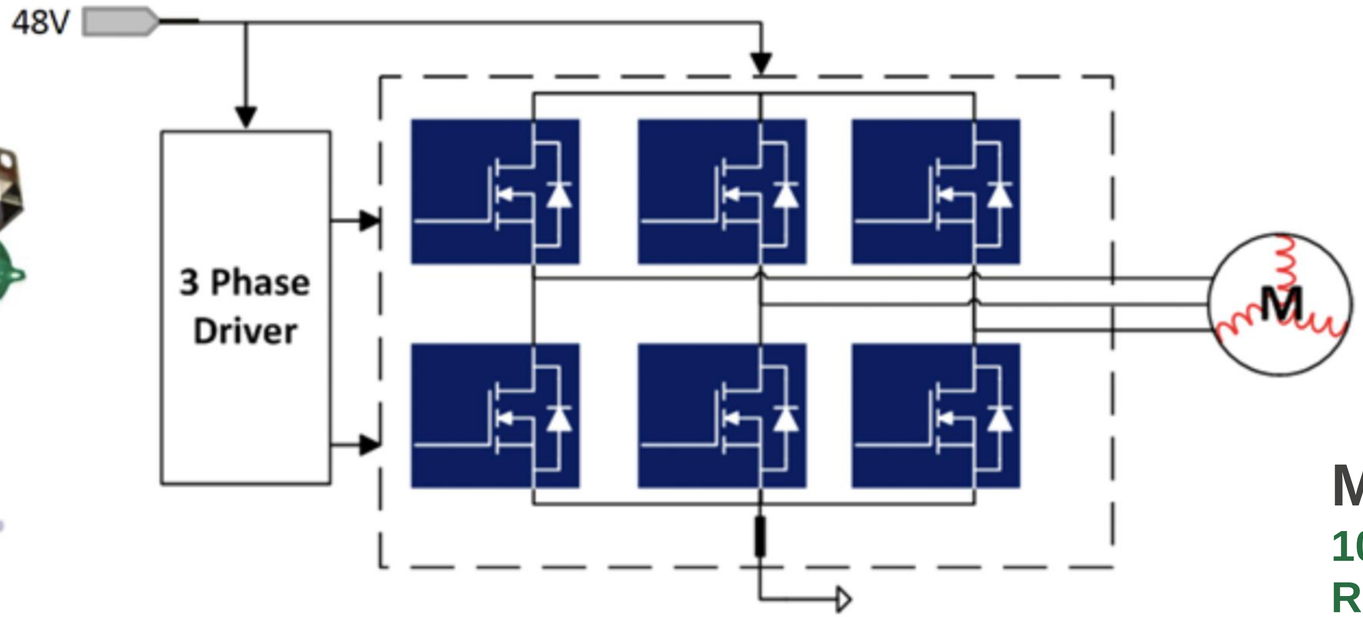

9.9X11.6mm

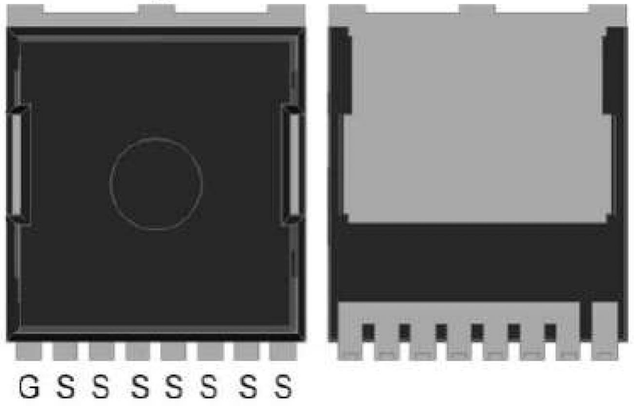

MSO100N019
100V, 330A, TOLL
RDS(on) 1.6mohm,

MSO600N480
600V, 42A, TOLL
48mohm

40V-MOSFET IPM
Application

MOSFET IPM for BLDC Application

three-phase BLDC motor is typically powered by three pairs of MOSFETs arranged in a bridge structure and controlled by PWM. PWM offers precise control over the motor’s speed and torque.
The major space of PCB is from the six MOSFET.
Using the MSIE40N150 that six MOS in one package to save sapce

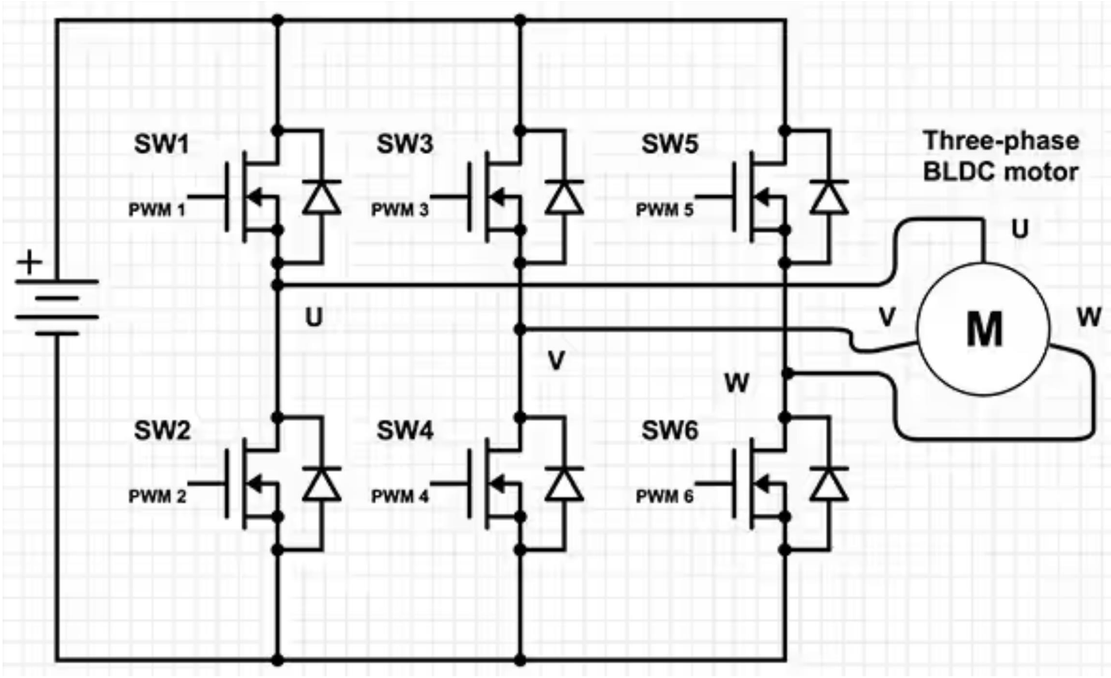

Save Space

14mmX12mm

MOSFET IPM for Power Drill

Power Drill

18~36V

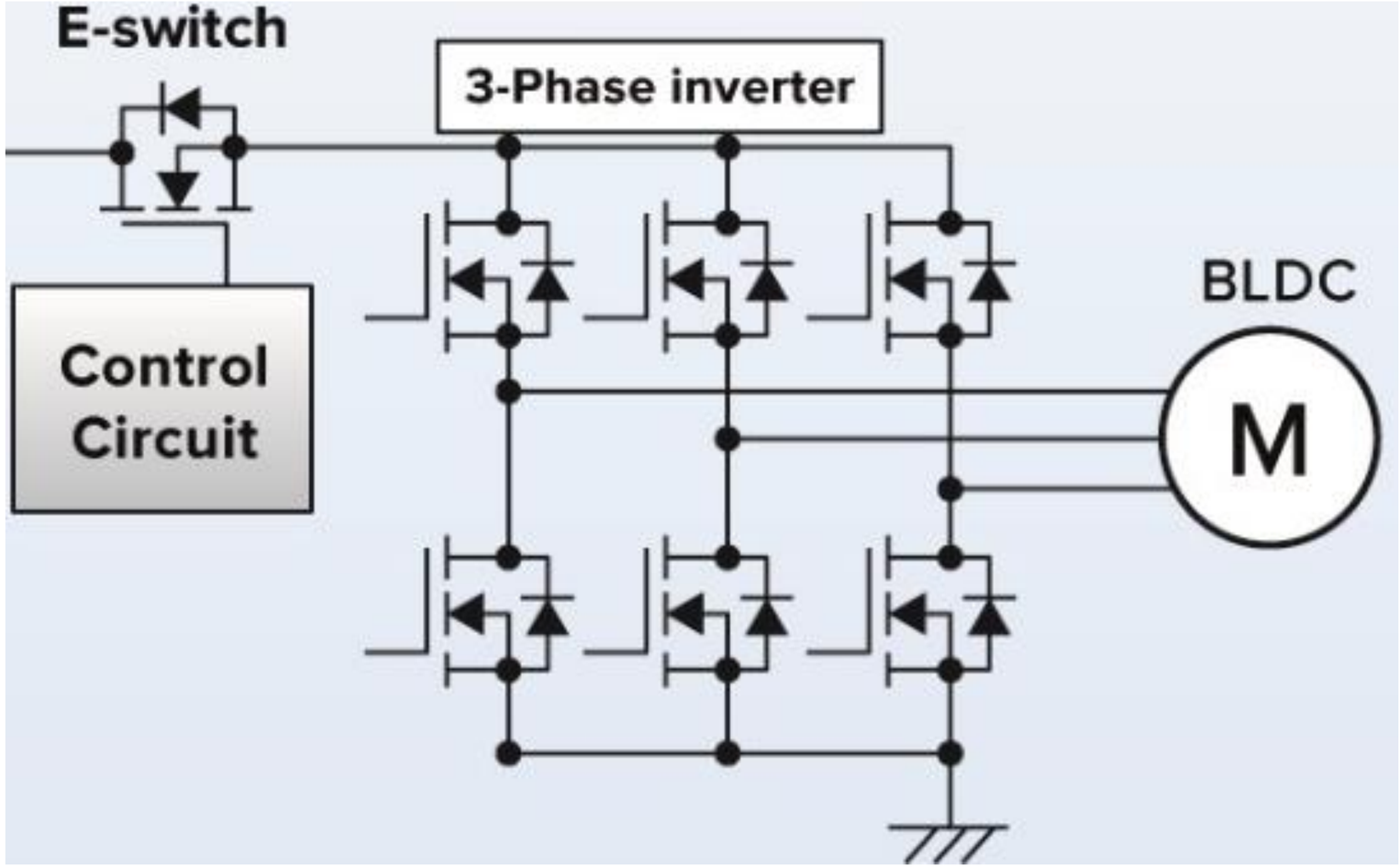

Estimated 6~12pcs 40V MOSFETs
Using one DFN 14X12 to replace it

MOSFET Bridge For Automotive

The new MOSFET Bridge is for the Electric Water Pump of EV.
This MOSFET is also suitable for a variety of BLDC

Applications
electric oil pumps, engine cooling fans, electric power steering, and battery cooling fans.

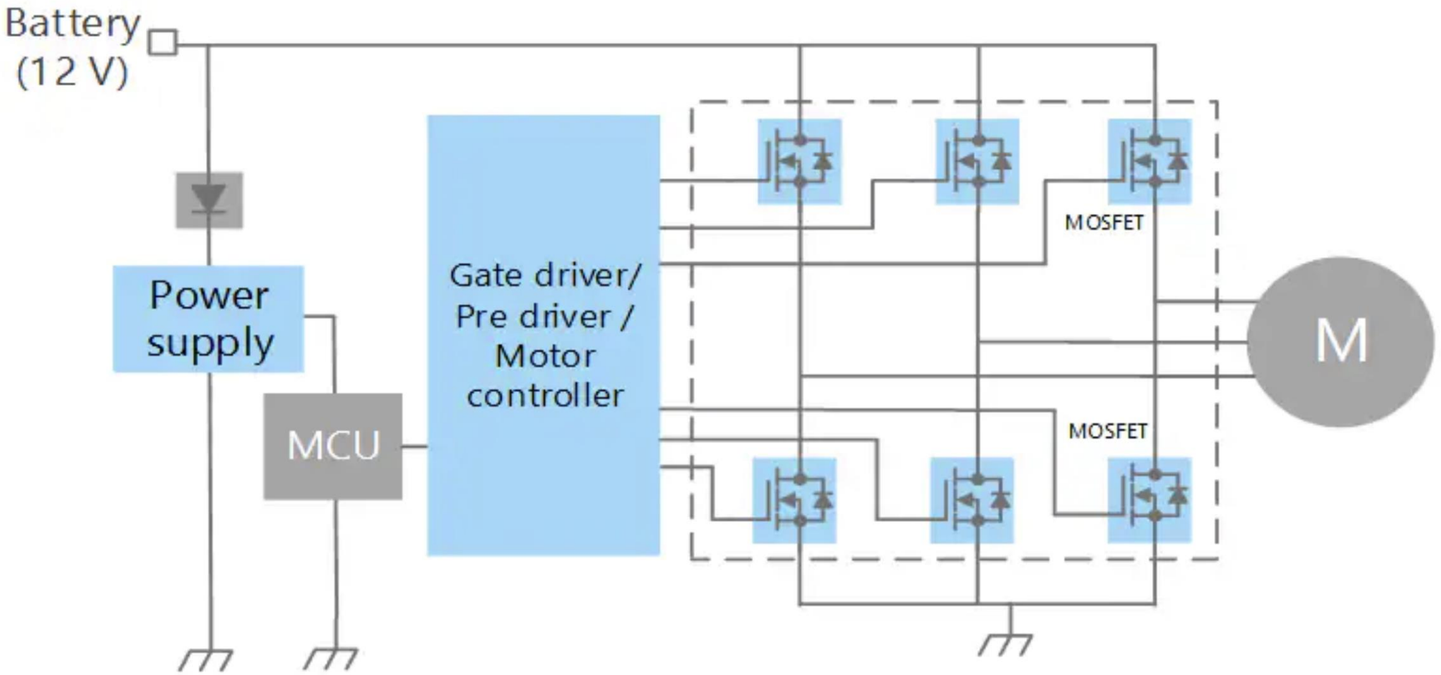

New MOSFET structure

MOSFET with graphene

MSH30N48 use graphene Cu for the backside metal to get the low RDS(on) and Better thermal resistance Rthjc low

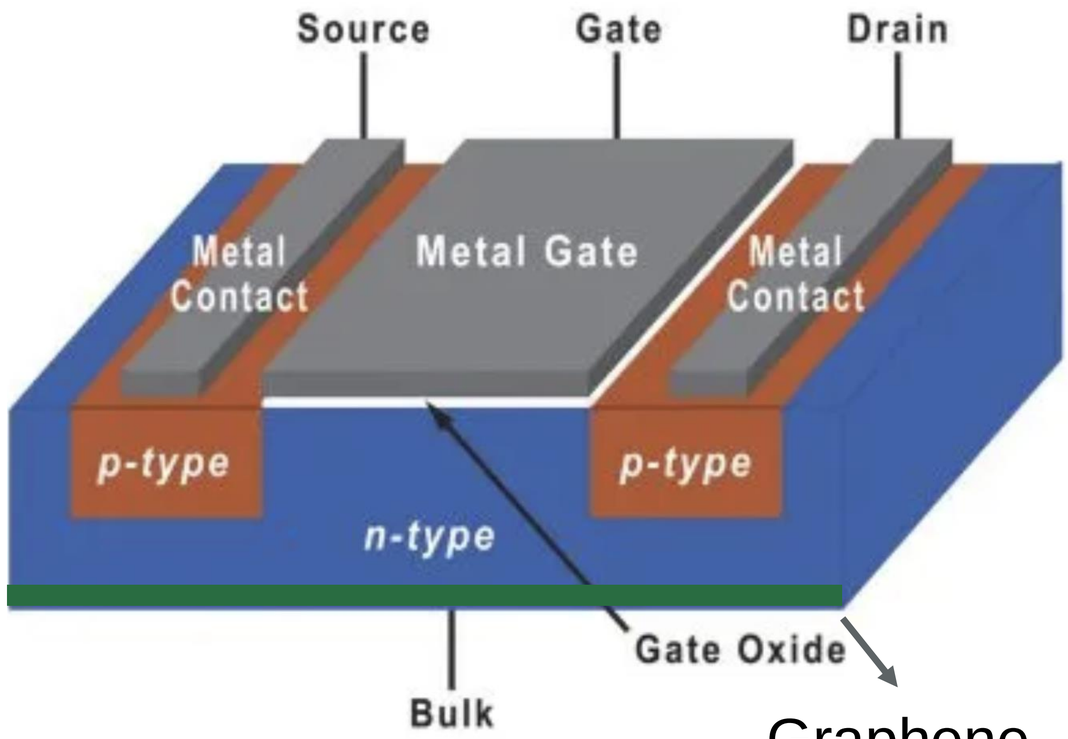

Graphene
石墨烯

25um 線徑	Au 金	Copper 銅	石墨烯 Copper 石墨銅
Electric Conductivity (IACS%) 導電率	77%	98%	102
Thermal Conductivity (W/mK) 導熱係數	318	380	460
Pull Strength (g) of 25um 拉力	9	15	15.34
Shear Strength (g) of 25um 推力	15	35	51.29

IGBT
Application

IGBT to replace the SJ MOSFET at low cost

P/N	Type	Voltage	Amp	Package	Target
GTD05N060	IGBT+FRED	600	5	TO-252	SJ-10A MOS
GTP20N065	IGBT+FRED	650	20	TO-220	SJ-40A MOS
GTF20N065	IGBT+FRED	650	20	TO-220F	SJ-40A MOS

Device	Package Type	VGS/VGE (V)	ID/IC (A)	Resistance (Ohm)		
				Min.	Typ.	Max.
MSF650N420 MOSFET (Super Junction)	TO-220F	10	3.5	-	0.33	0.4
MSF10N65 MOSFET	ITO220 AB	10	3.5		1.94	
GTD05N060 IGBT	TO-252	10	3.5		0.445	

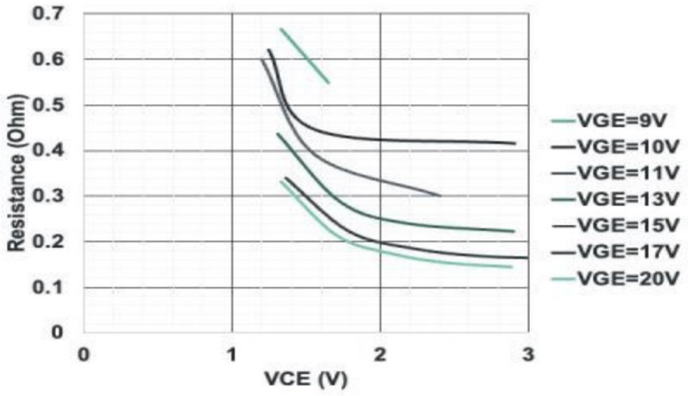

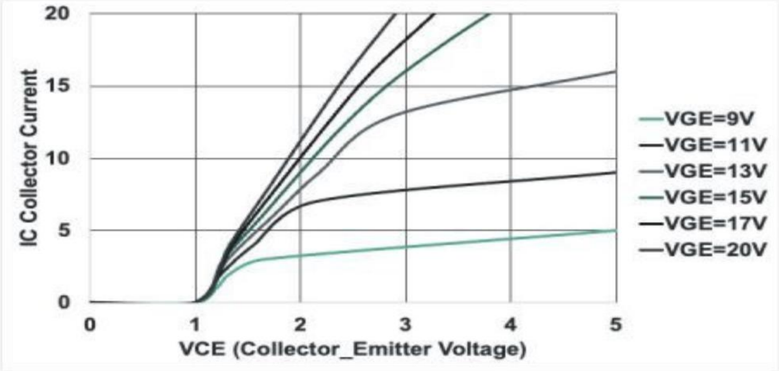

Our IGBT can replace the C6 Cool MOS

Better RDS(on) than the C3~C5

Low Cost than the C6 SJ MOS

IGBT with SiC SBD

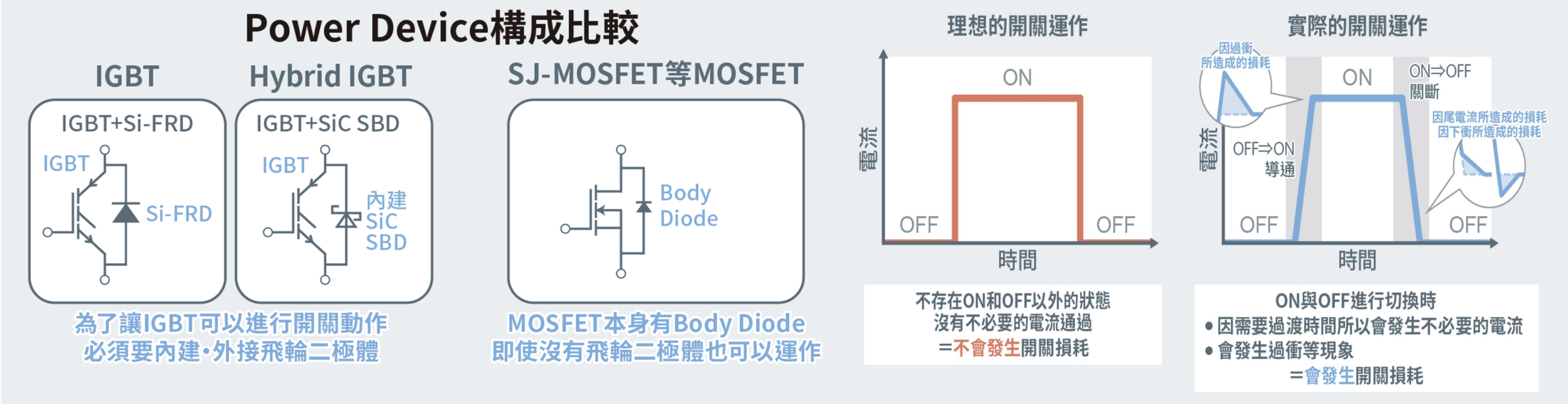

P/N	Type	Voltage	Amp	Package	Target
GTSB20N065	IGBT+SIC SBD	650	20	TO-263	RGW40NL65CHRB
GTSF20N065	IGBT+SIC SBD	650	20	TO-220F	RGW40NL65CHRB
GTSM20N065	IGBT+SIC SBD	650	20	SOT-227	
GTSM40N065D	IGBT+SIC SBD	650	40	SOT-227	

IGBT with SiC SBD on an Inverter for Photo Voltaic Applications

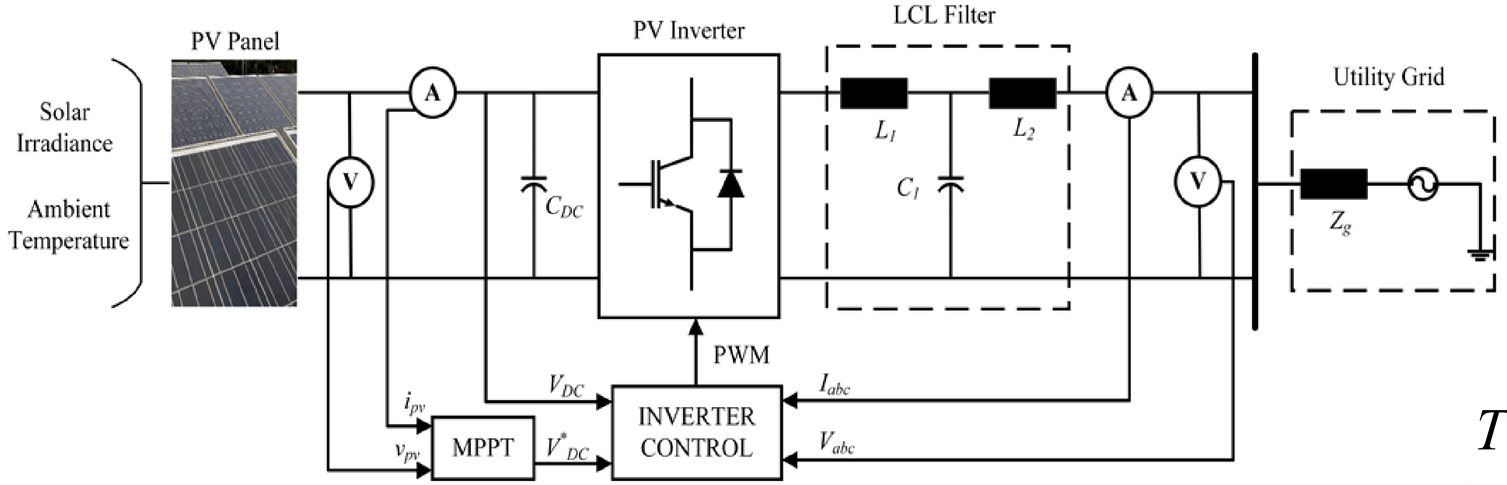

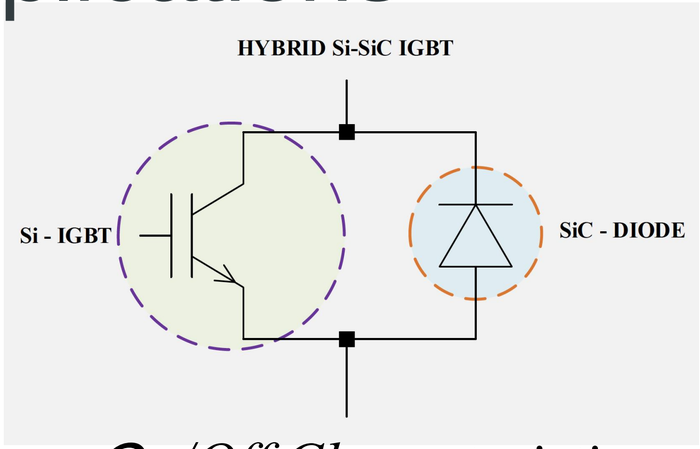

Turn On/Off Characteristics

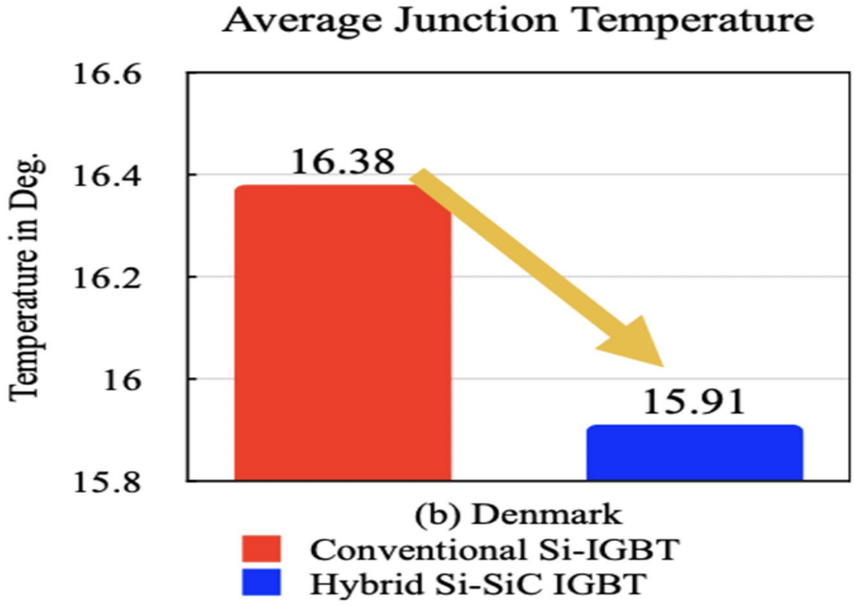

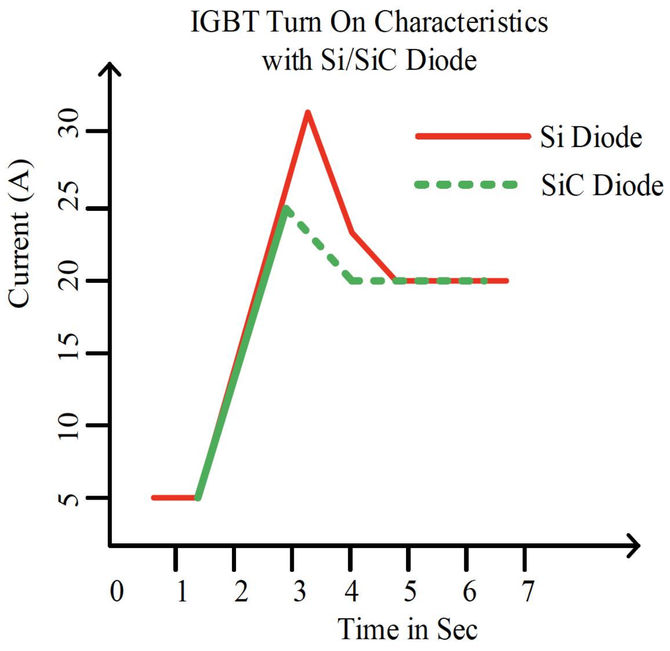

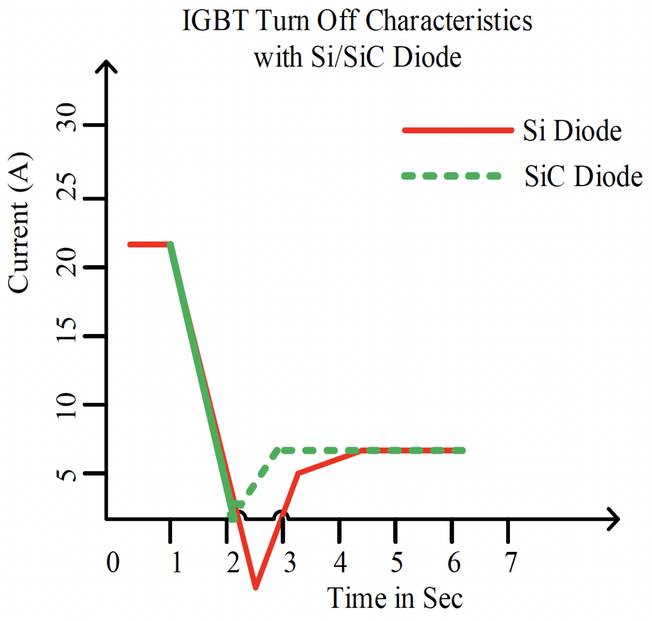

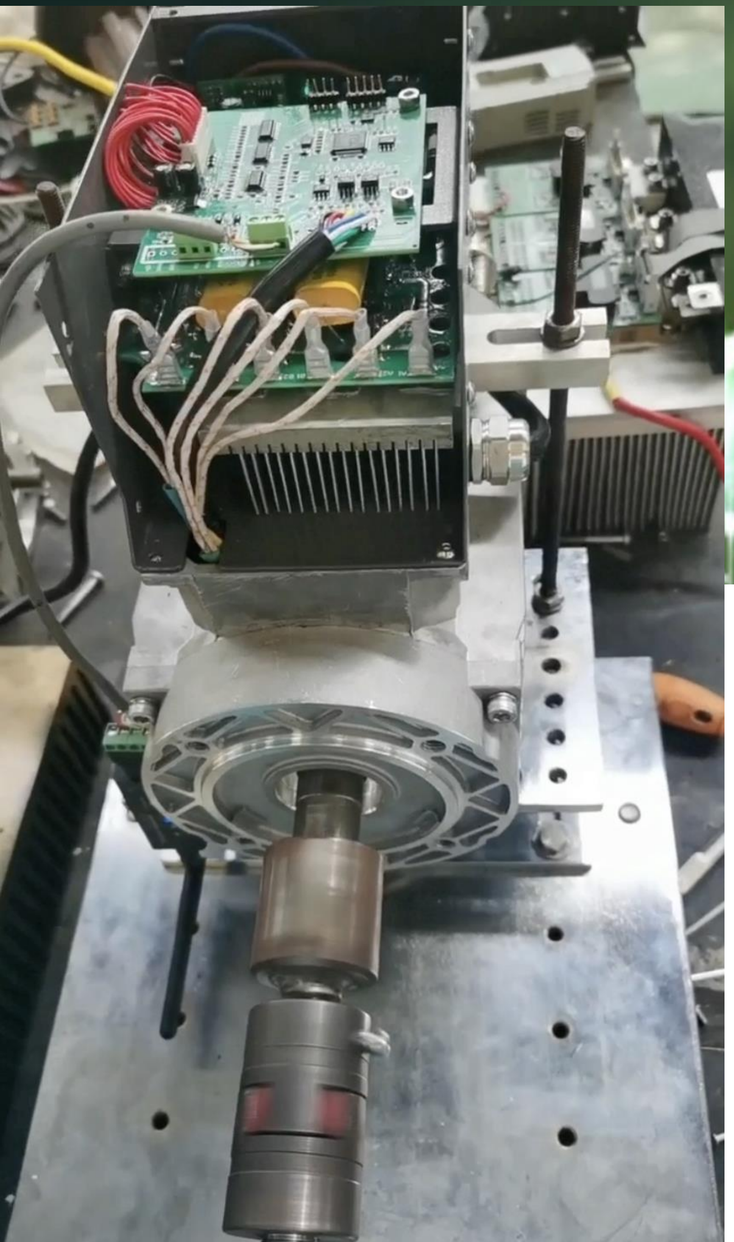

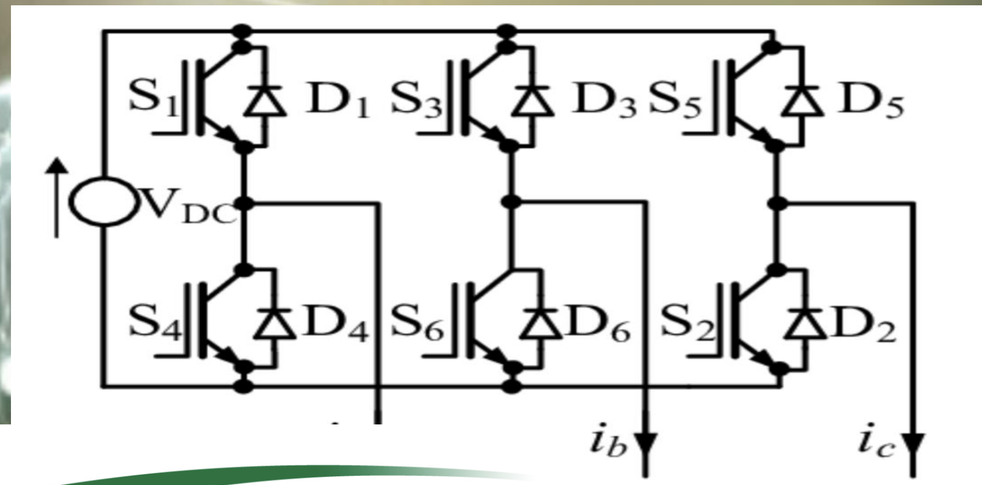

Brückewell

GTF20N065

650-V Field Stop IGBT copacked with fast and soft antiparallel diode

Features

- High efficiency in hard switching and resonant topologies
- Easy paralleling capability due to positive temperature coefficient in VCE(on)
- Pb-free lead plating
- RoHS compliant

Graphic Symbol

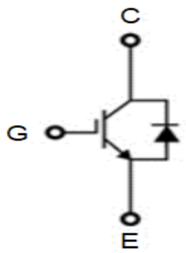

V_{CE}(on) typ. = 1.6V &
R_{CE}(on) typ. = 80mΩ
@ V_{GE} = 15V, I_C = 20A
Equivalent MOSFET Parameters
R_{DS}(on) typ. = 80mΩ
@ V_{GS} = 15V, I_D = 20A

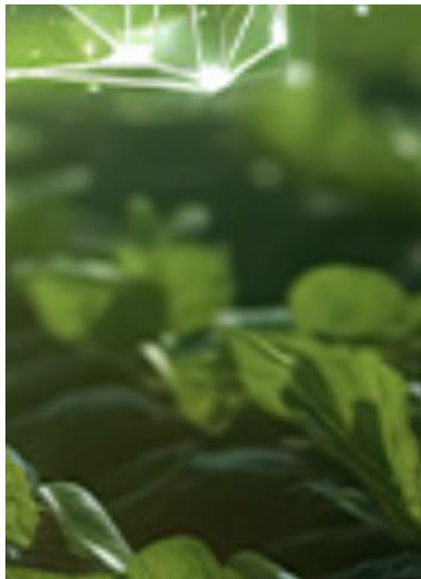

SiC-MOSFET Application

SiC Semiconductor Forecast by Applications

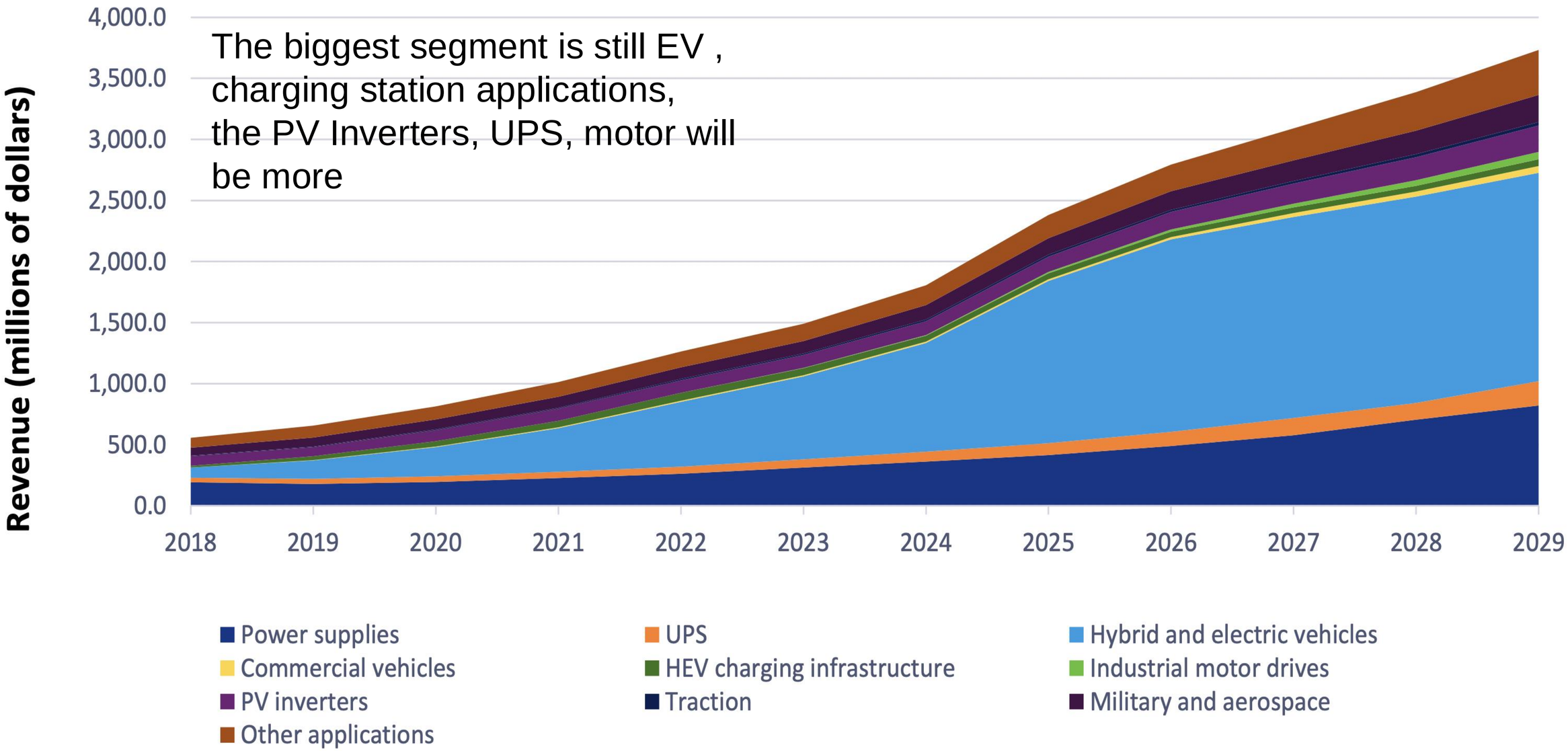

SiC MOSFET Package with different application

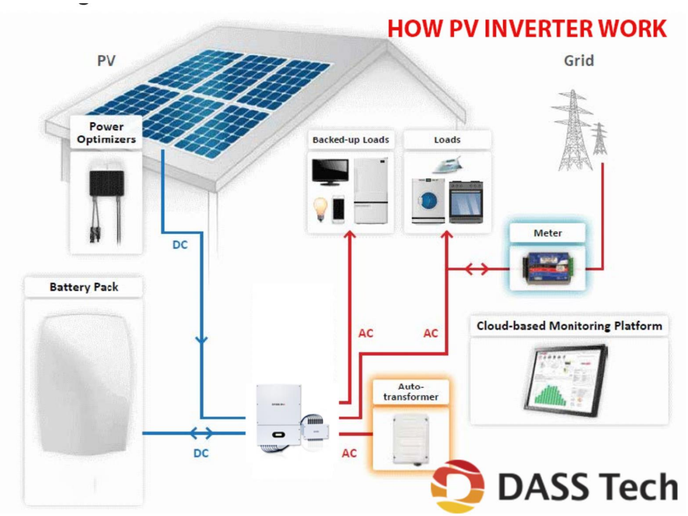

TO-247-3L, 4L, SOT-227, TO-263-7L Packages
1200V, 160mohm, 80mohm, 37mohm available
< 20mohm will be available with in 2024’ Q4

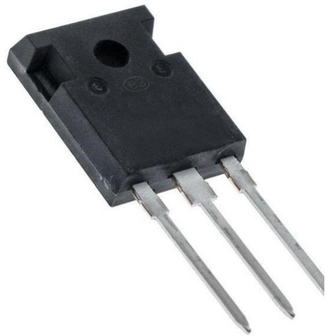

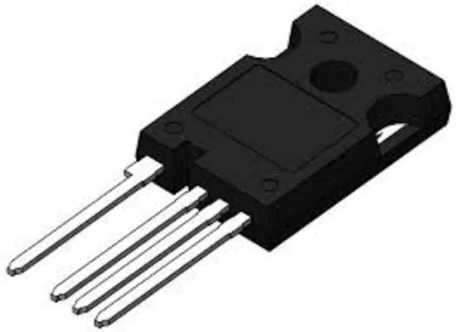

SOT-227 25X33mm

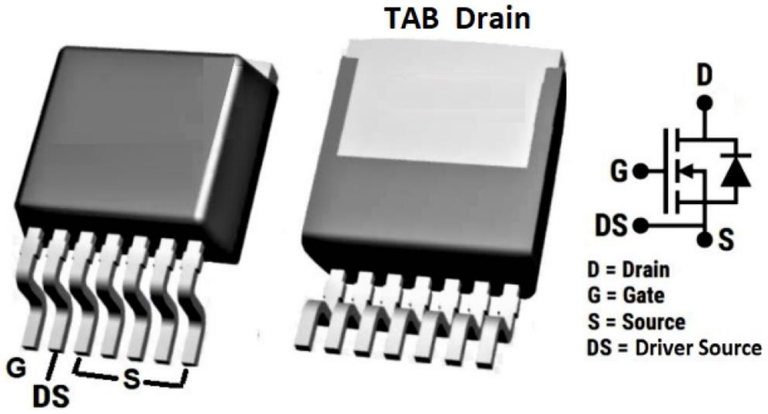

Bruckewell Si/SiC HyS Module

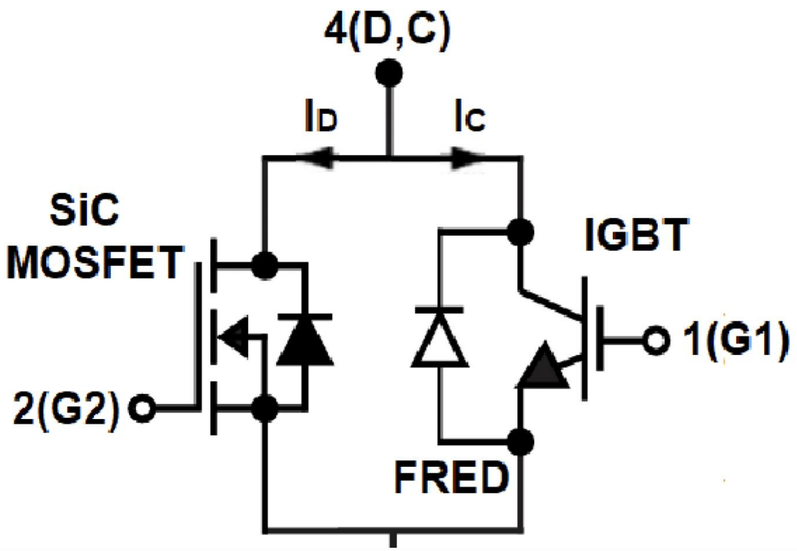

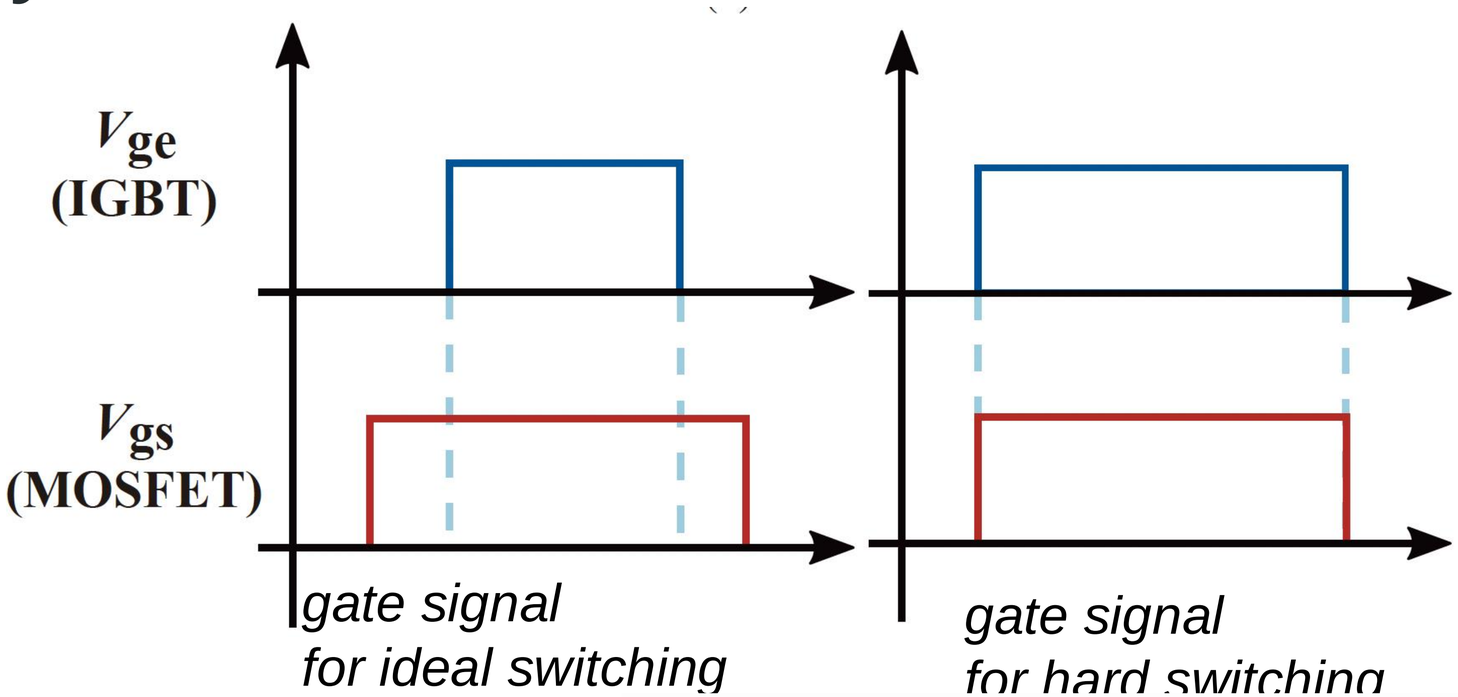

gate signal for ideal switching (IGBT ZVS)

gate signal for hard switching

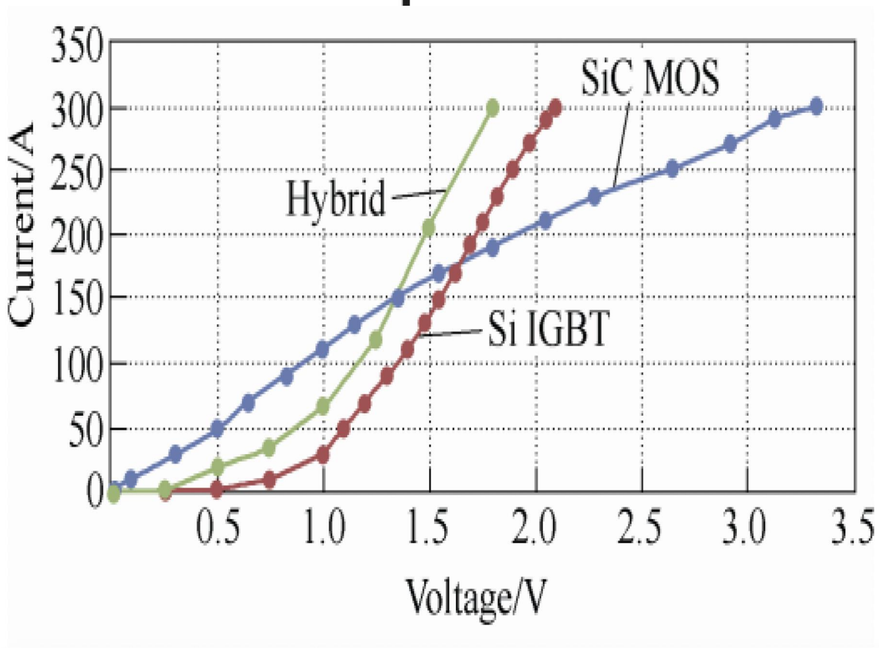

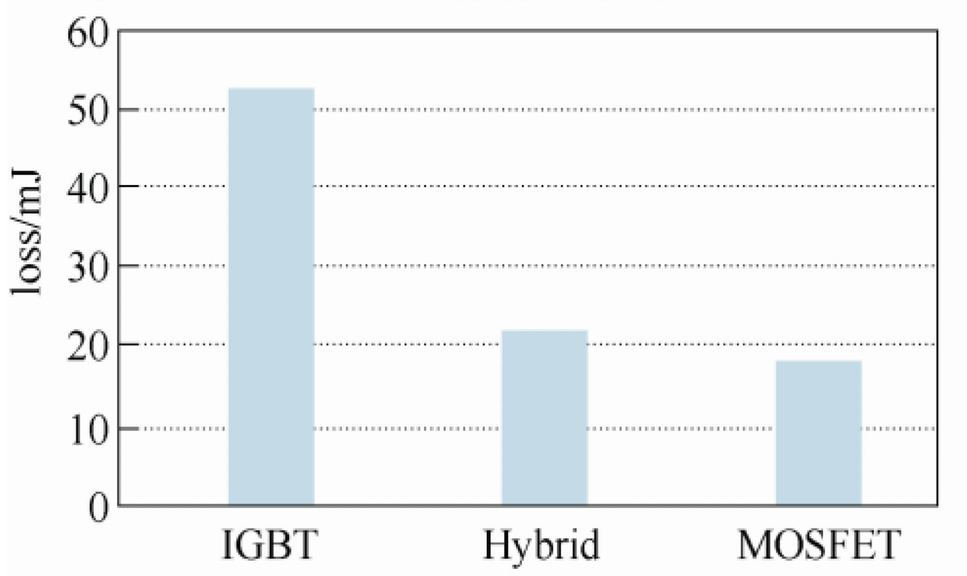

Brückewell

IGD8233 Series

High Reliability Isolated Dual-Channel Gate Driver

IGD8233 is 4.0A sourcing and 6.0A sinking peak output current with rail-to-rail dual-channel isolated gate driver. It includes the programmable deadtime and DIS for disabling the output. The driver can be configured as dual high/low side or half bridge driver. It has 5kVRMS isolation in SOW16 package. The high CMTI, low propagation delay features perfectly suite the high speed MOSFET, IGBT and SiC gate driver applications.

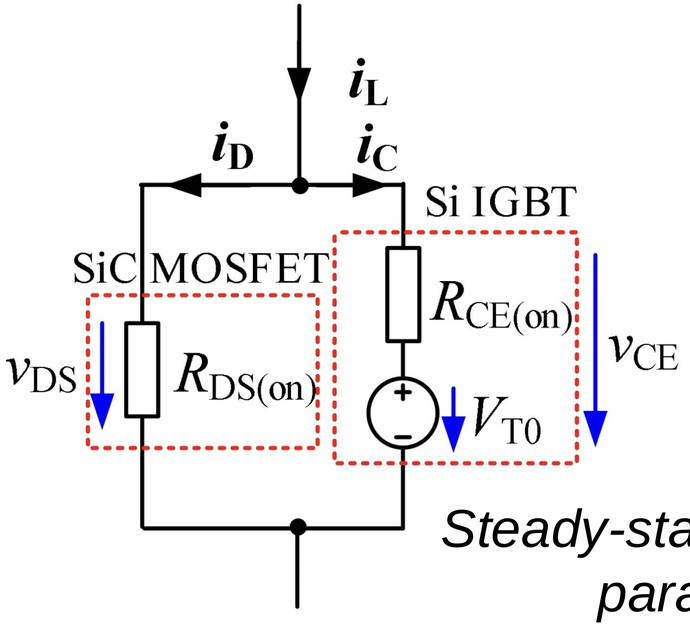

$$i_C = \frac{i_L \cdot R_{DS(on)} - V_{T0}}{R_{DS(on)} + R_{CE(on)}}$$

$$i_D = \frac{i_L \cdot R_{CE(on)} + V_{T0}}{R_{DS(on)} + R_{CE(on)}}$$

Steady-state model of hybrid parallel devices

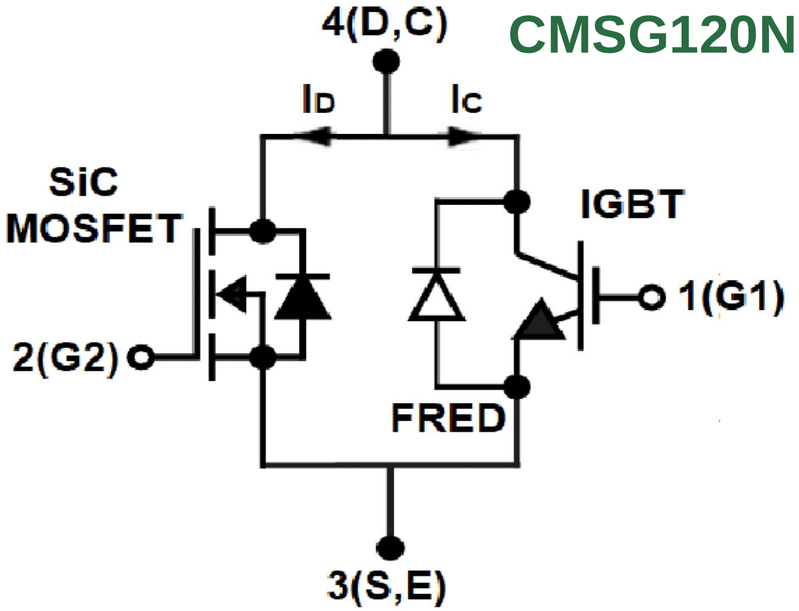

CMSG120N013MDG

IGBT:
G1 Gate
C Collector
E Emitter

SiC MOSFET
G2 Gate
D Drain
S Source

Ic(A), 25C=260A
Ic(A), 100C=130A

VCE(on) typ. = 1.8V & RCE(on) typ. = 13mΩ @ VG1E=VG2S = 15V, IC = 130A
Equivalent MOSFET Parameters
RDS(on) typ. = 13mΩ @ VGS = 15V, ID = 130A

SOT-227 Mounting on the Cool water Plate

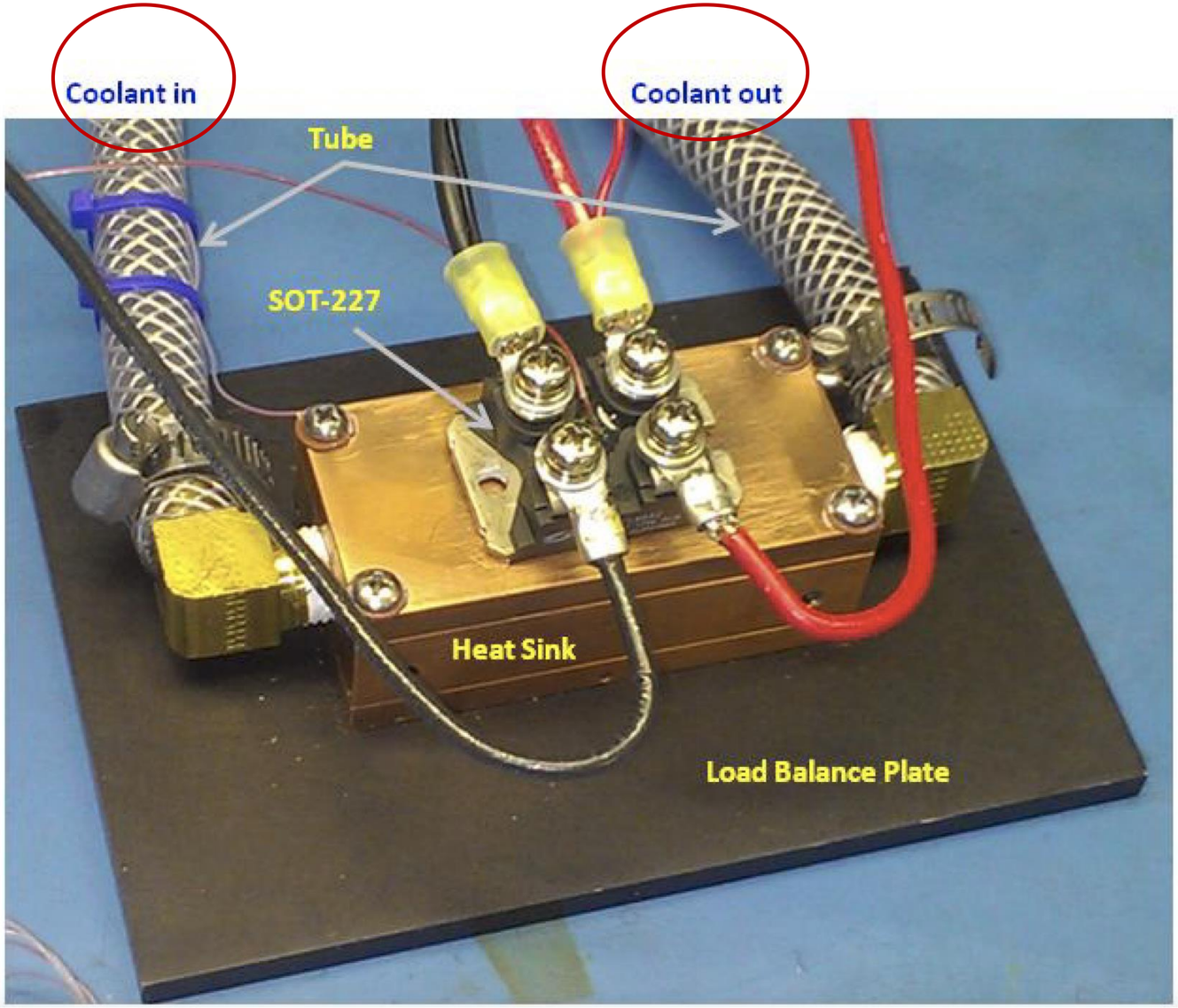

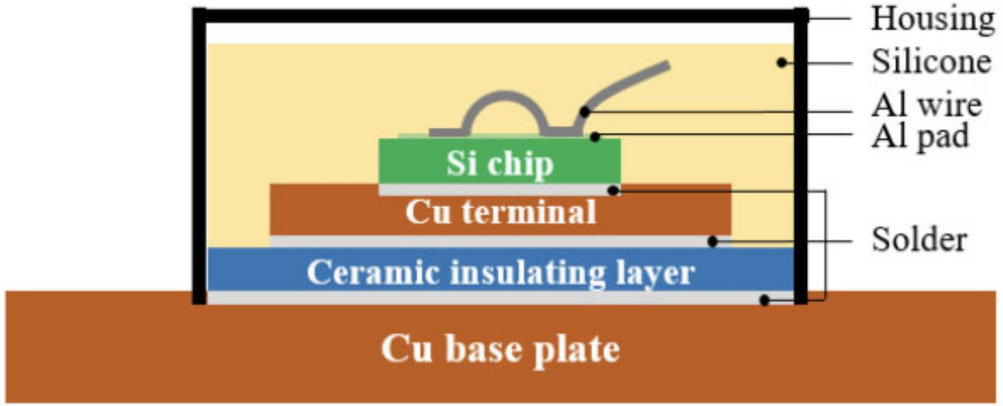

Isolated Dual-Channel Gate Driver Application

Isolated Dual-Channel Gate Driver-IGD8233 series

P2P compatibility with Skyworks SI8233 and Novosense NSI6602 makes the IGD8233 Series a top choice for replacing scarce materials, especially amidst the surge of cutting-edge technologies in power supplies, motors, and air conditioning drivers.

Designed to optimize Bruckewell MOSFETs and IGBTs,.

Industrial Applications:
- Power Delivery Systems
- Motor Control Systems
- Isolated DC-DC Power Supplies
- Lighting Control Systems
- Plasma Displays
- Solar and Industrial Inverters

Automotive Applications:
- On-board Chargers
- Battery Management Systems
- Charging Stations
- Traction Inverters
- Hybrid Electric Vehicles
- Battery Electric Vehicles

GaN FETs
Application

GaN power devices application

GaN POWER Devices: Long-Term Evolution

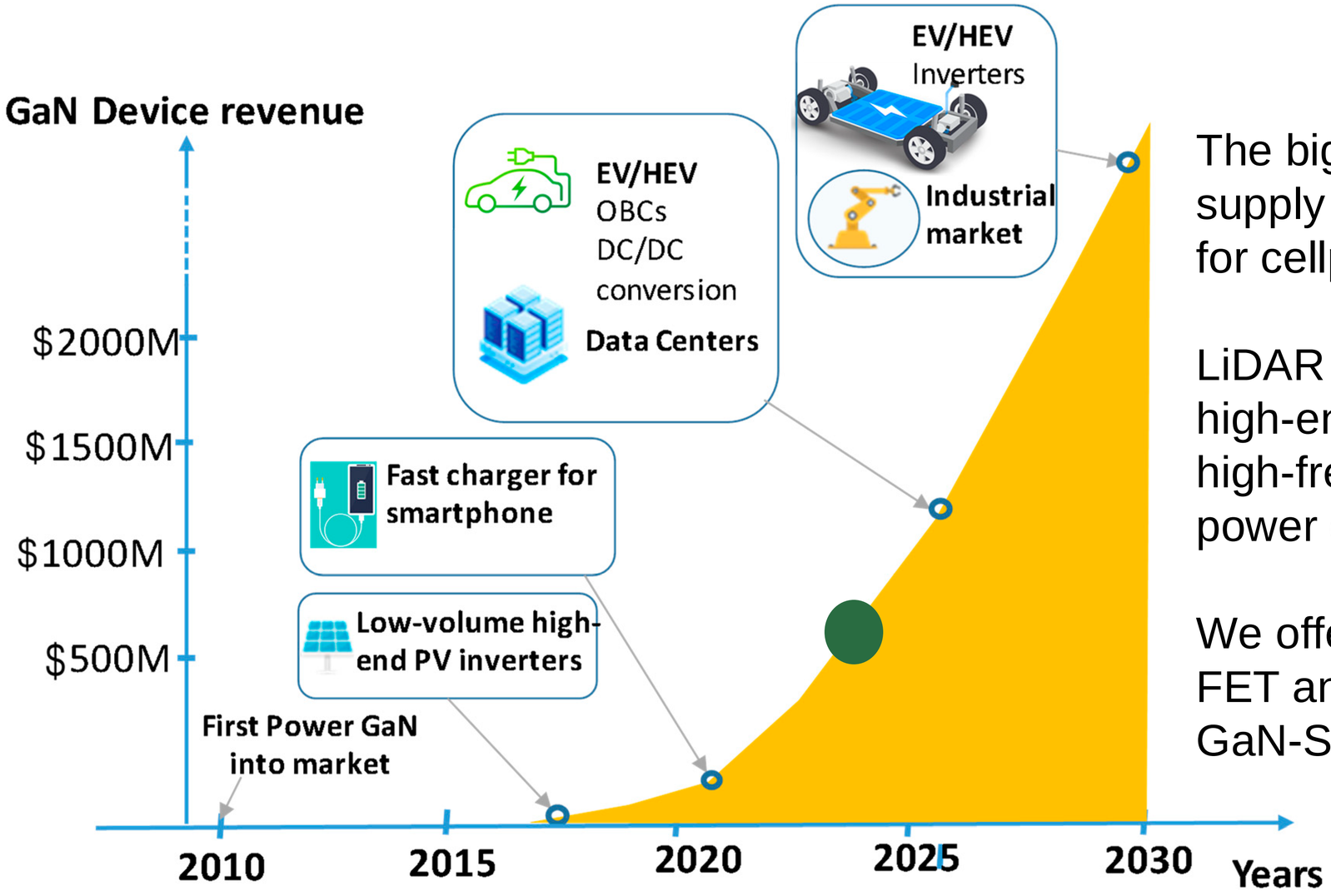

The biggest segment is still power supply applications, i.e. fast charging for cellphones.

LiDAR applications are the other high-end solutions that benefit from high-frequency switching in GaN power devices.

We offer the D-Mode FET, E-Mode FET and D-Mode+Driver IC by 650V GaN-S Devices

Gallium nitride FETs solution

Part#	RDS(on)	VGSS or VPWM (Max. Ratings)	Description
HMHL065N185C	150mohm	-20V ~ +20V	Cascode (D mode GaN + LV MOS
HMHL065N210E	150mohm	-18V ~ +18V	E-mode GaN
HMHL065N170CI	170mohm	-30V~+30V	D mode GaN + Driver IC

Cascode

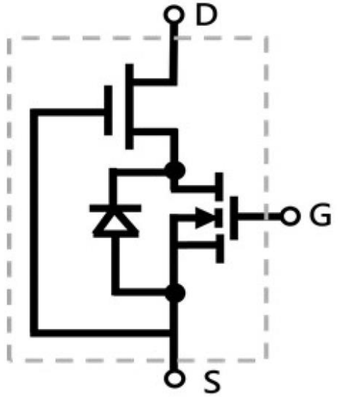

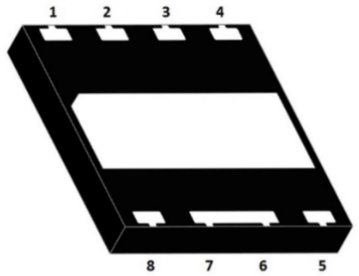

Drain: 1, 2, 3, 4
Source: 5, 6, 7
Gate: 8

E-Mode

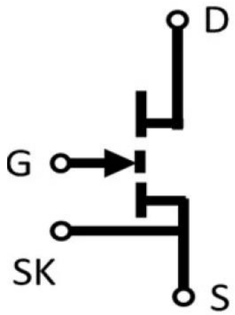

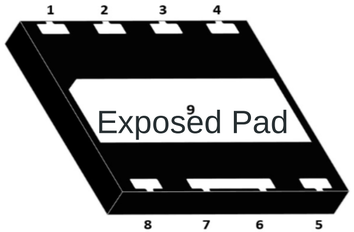

Drain: 1, 2, 3, 4
Source: 5, 6, 7, 9
Gate: 8

GaN-IC

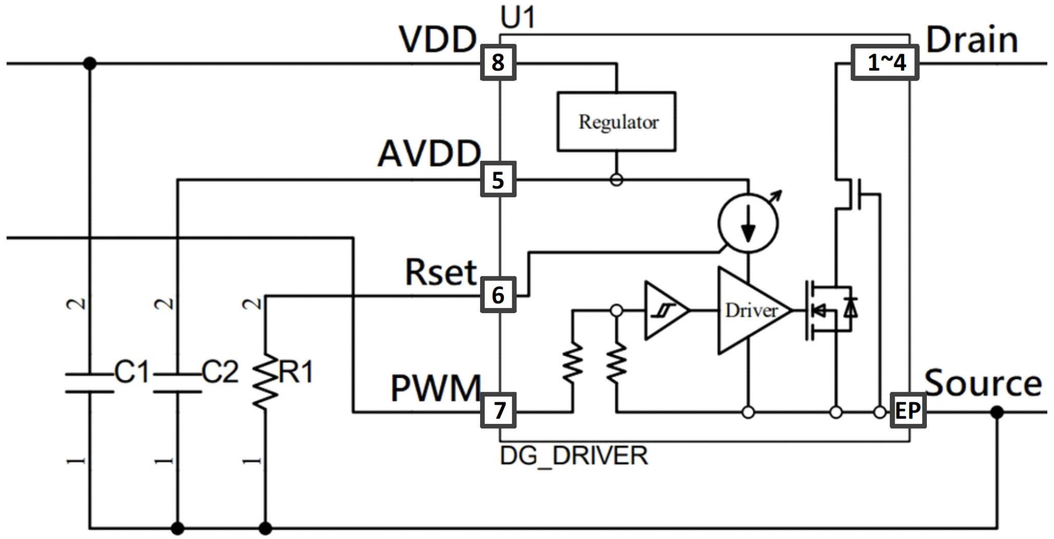

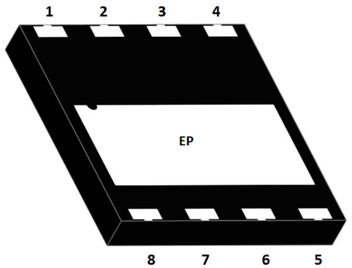

AVDD: 5
RSET: 6
PWM: 7
VDD: 8

Drain: 1, 2, 3, 4
Source: EP

Fast Charger, Automotive Charger, Power server
PV Inverters, EV OBCs

New generation GaN HEMT

Normally the SiC, Si MOSFET has the same Pin assignment GDS,
but the Casocde GaN is different, by GSD
Using the special package design to get the same pin assignment (GDS) for the GaN cascode with Si, SIC MOSFET

Si SJ MOSFET

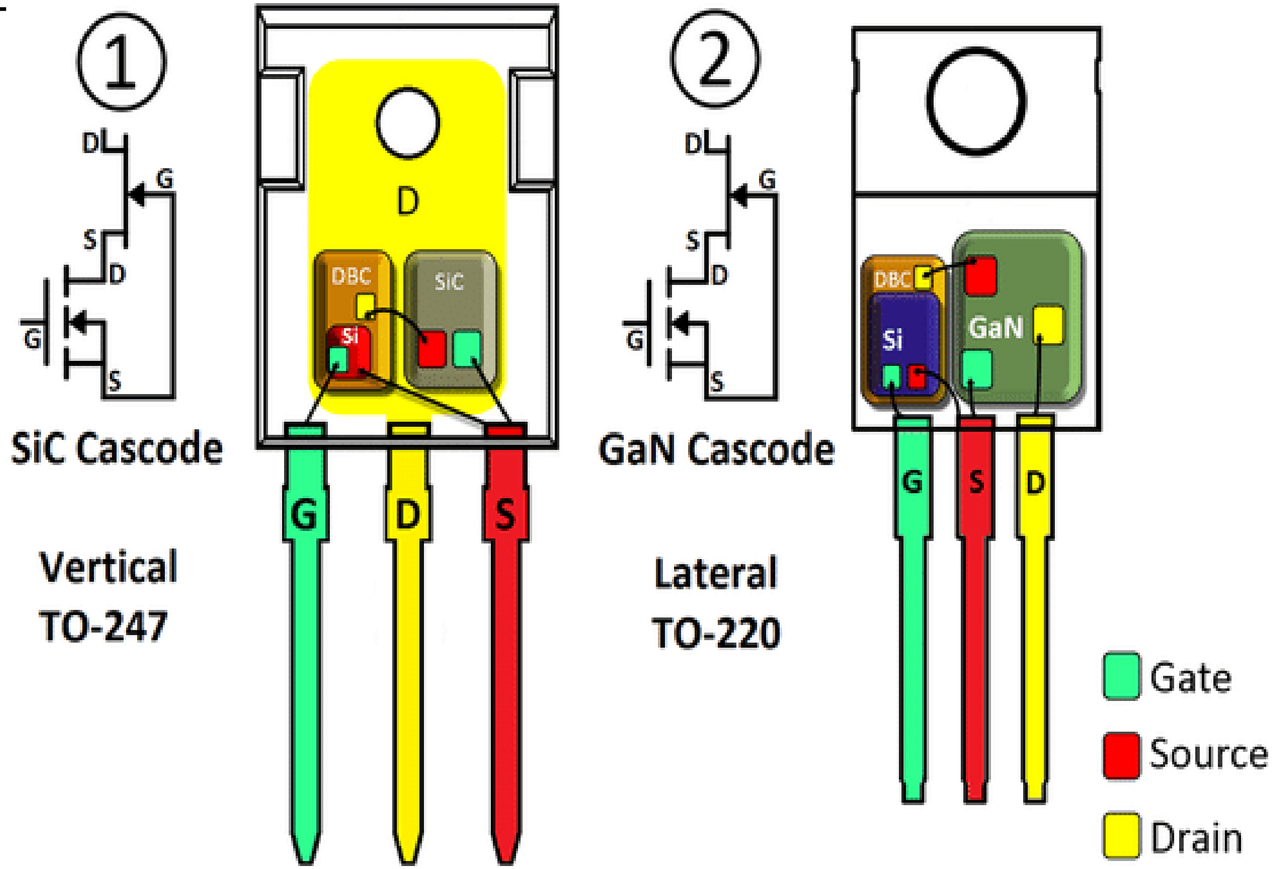

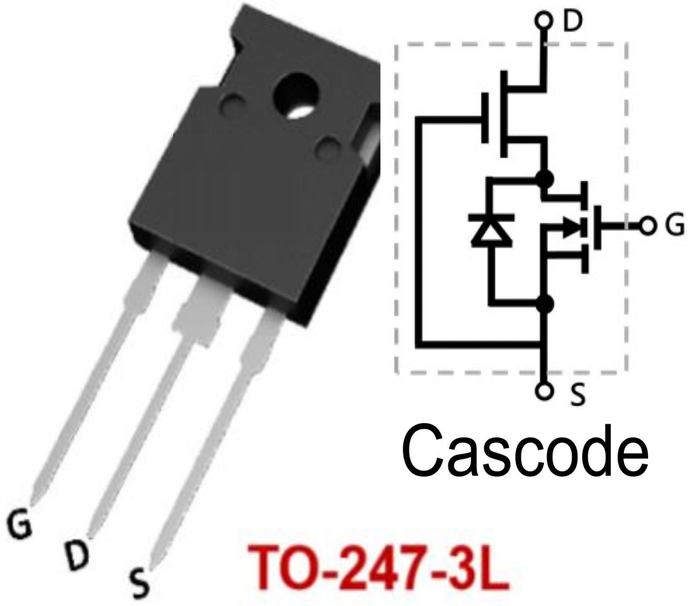

New Gen GaN HEMT

GaN HEMT for the high-side/ Low side circuit

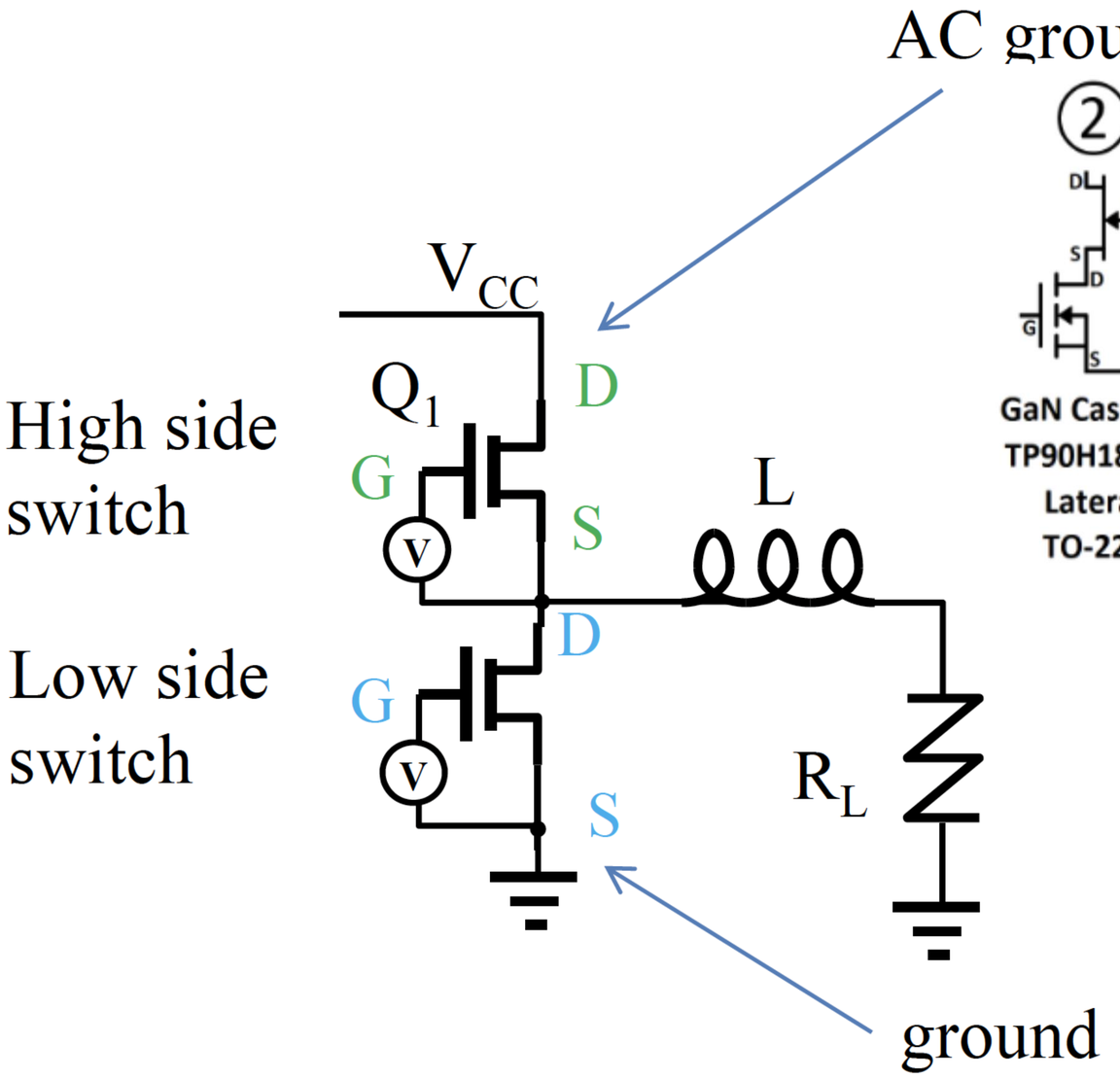

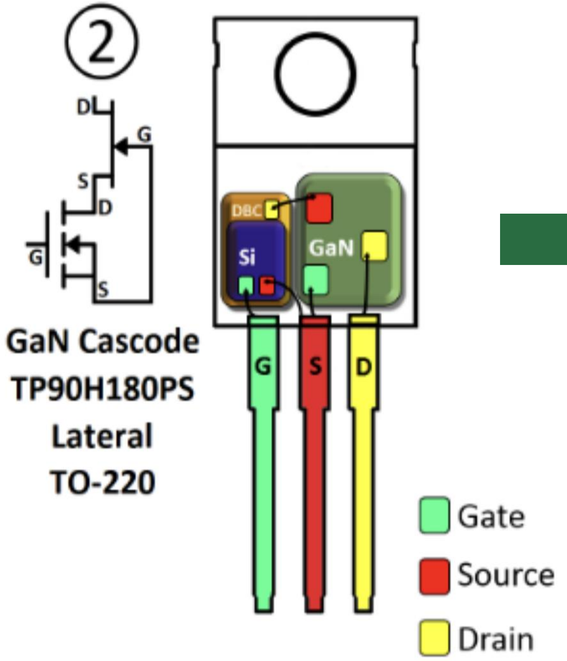

HMHC065N120C

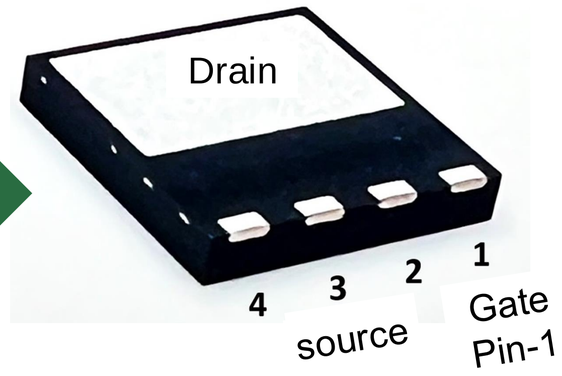

Conventions GaN Cascode use the GSD, Source pin connect with Case, good for low side switching, but not good for high side switching

Because the drain come out more thermal, Drain to case make the package Cool.

New generation GaN HEMT

Pin to Pin to replace Cool MOSFET (Super Junction)

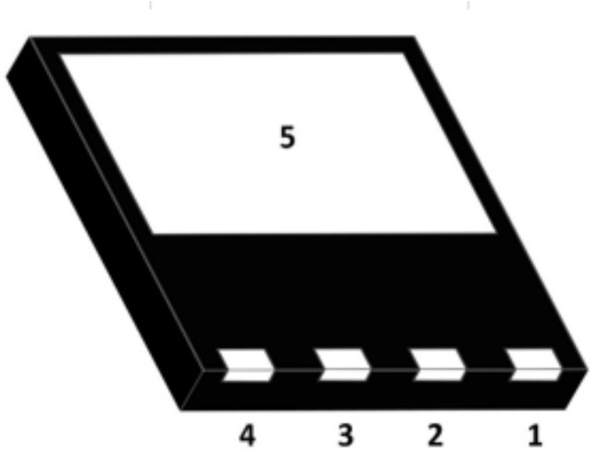

HMHC065N185C
GaN HEMT
185mohm
650V

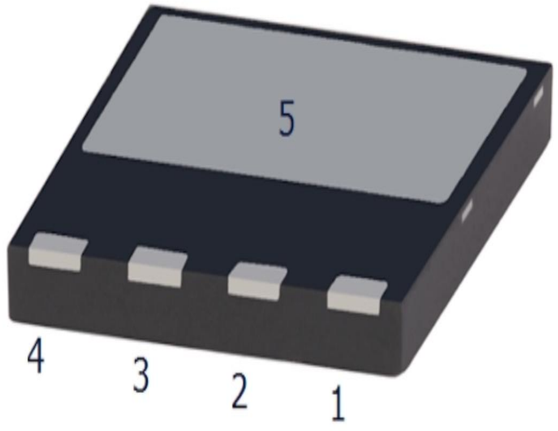

IPL60R199CP
Cool MOS
199mohm
600V

DFN 8X8 Available, will extend to TO-220, TO-247 and TOLL soon

P/N	Voltage	Ampere	RDSon (mohm) Max.	Package
HMHC065N120C	650	13	120	DFN8X8
HMHC065N185C	650	10	185	DFN8X8

New generation 700V GaN HEMT

Pin to Pin to replace Cool MOSFET (Super Junction)

HMF070N120C
HMF070N180C
Are 700V GaN HEMT with the TO-220F package to P2P replace the SJ MOSFET
In the 2025, will have the TO-252/ TO-263 and Isolate TO-220 Package for the GaN Series products

Brückewell
Bruckewell Technology LTD.

Next-Generation Power Semiconductors Global key Supplier